3. Generator

A: REMOVAL

1) Disconnect the ground cable from the battery.

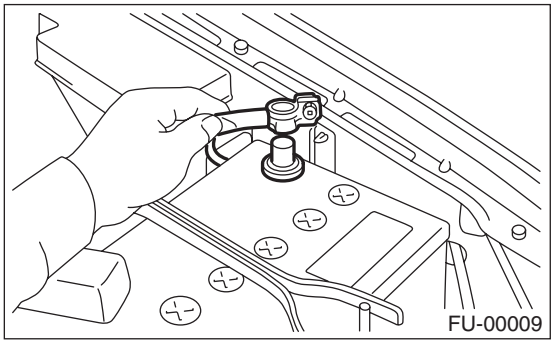

2) Disconnect the connector and terminal from generator.

- Non-turbo model

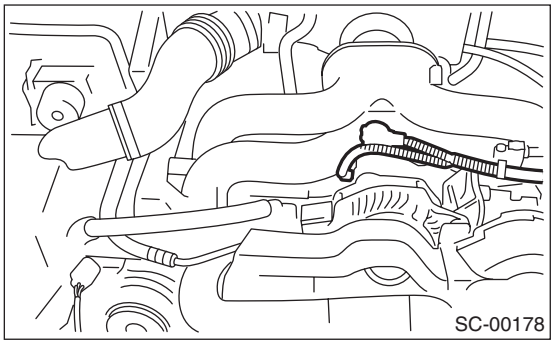

- Turbo model and STI model

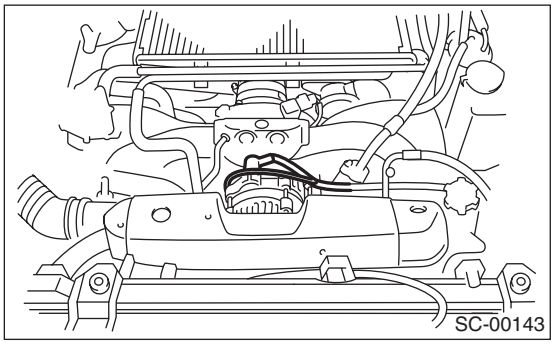

3) Remove the V-belt covers.

4) Remove the front side V-belts. <Ref. to ME(H4SO)-39, FRONT SIDE BELT, REMOVAL, V-belt.> <Ref. to ME(H4DOTC)-44, FRONT SIDE BELT, REMOVAL, V-belt.>

5) Remove the bolts which install the generator onto bracket.

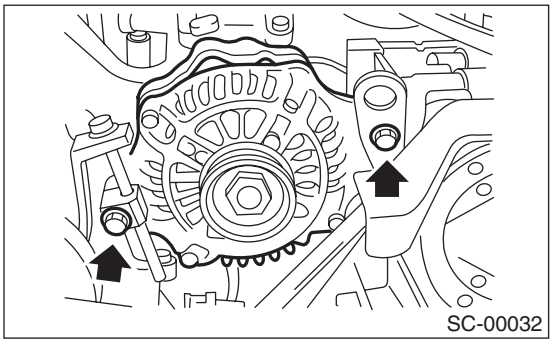

B: INSTALLATION

Install in the reverse order of removal.

Tightening torque:
25 N·m (2.5 kgf-m, 18.1 ft-lb)

CAUTION:
Check and adjust the V-belt tension. <Ref. to ME(H4SO)-40, INSPECTION, V-belt.> <Ref. to ME(H4DOTC)-45, INSPECTION, V-belt.>

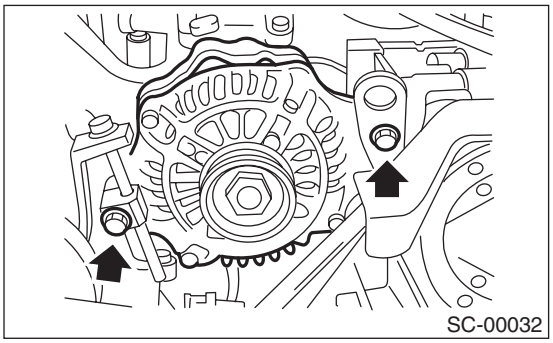

C: DISASSEMBLY

1) Remove the four through-bolts.

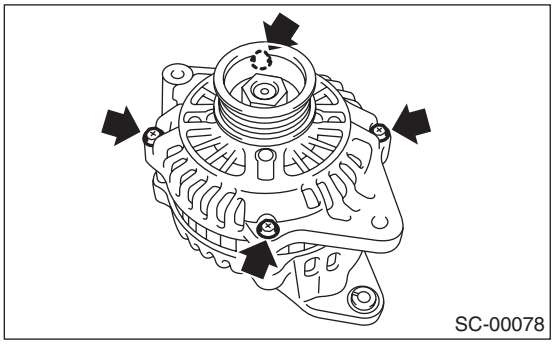

2) Use a drier to heat the rear cover (A) portion to 50°C (122°F).

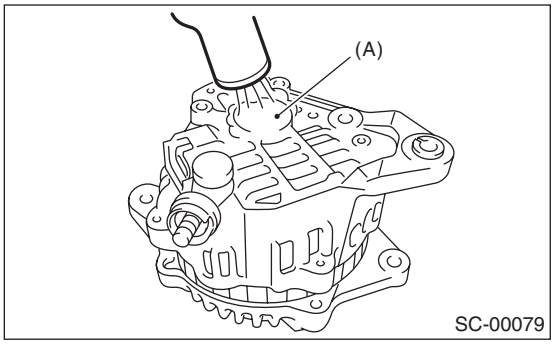

3) Insert the end of a flat tip screwdriver into the gap between stator core and front cover. Pry them apart to disassemble.

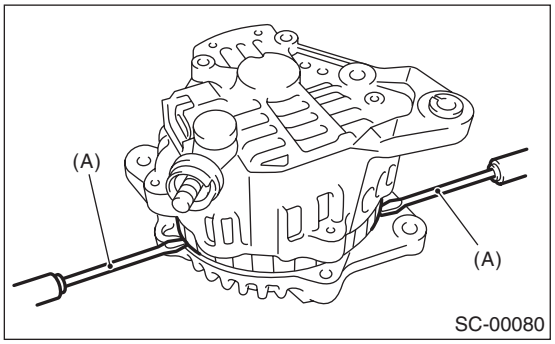

(A) Screwdriver

4) Using a vise, support the rotor and remove the pulley bolt.

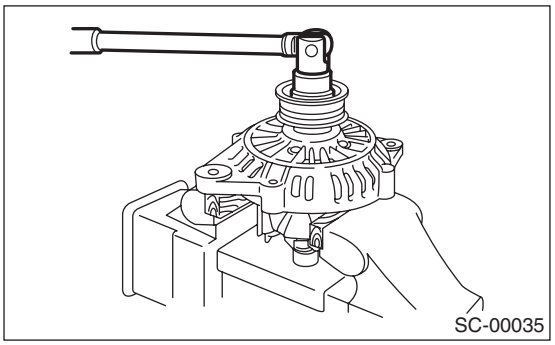

CAUTION:
When holding the rotor with a vise, place aluminum plates or wooden pieces on the vise jaws to prevent rotor from damage.

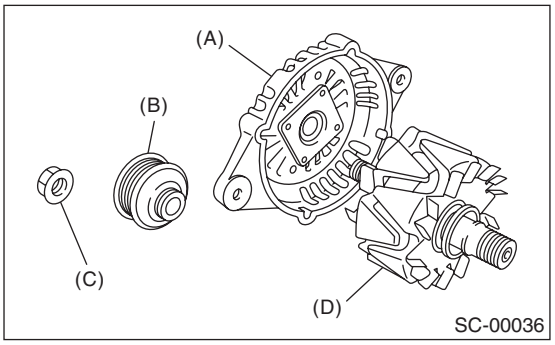

(A) Front cover
(B) Pulley
(C) Nut
(D) Rotor

5) Use the following procedures to remove the ball bearings.

(1) Remove the bolt, and then detach the bearing retainer.

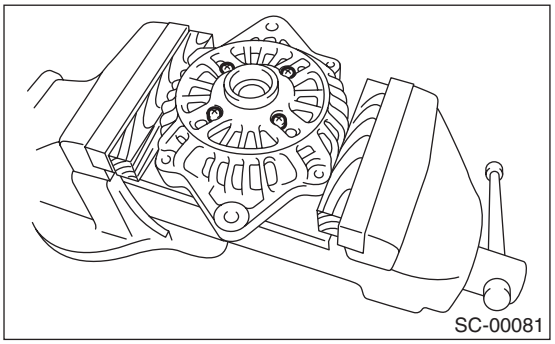

(2) Firmly attach an appropriate tool (such as a correct size socket wrench) to the bearing inner race.

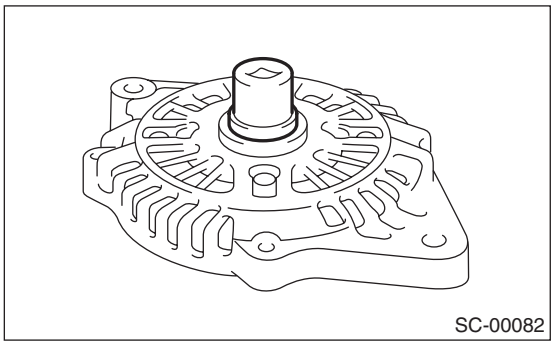

(3) Use the press to push the ball bearings out from the front cover.

6) Using the bearing puller, remove the bearings from the rotor.

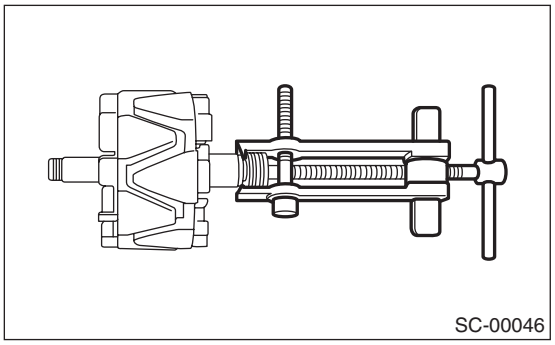

7) Disconnect the connection between the rectifier and stator coil, then remove the stator coil.

CAUTION:
The rectifier is easily damaged by heat. Do not allow a 180 — 270 W soldering iron to contact the terminals for 5 seconds or more at a time.

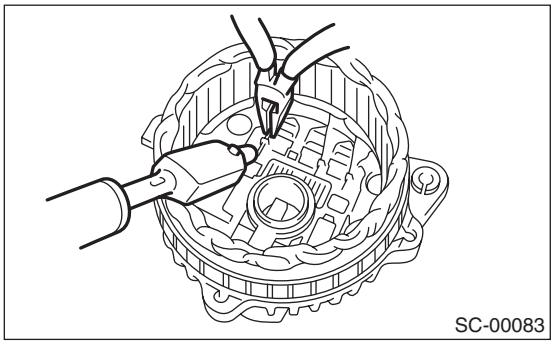

8) Use the following procedures to remove the IC regulator.

(1) Remove the screws which secure the IC regulator to the rear cover.

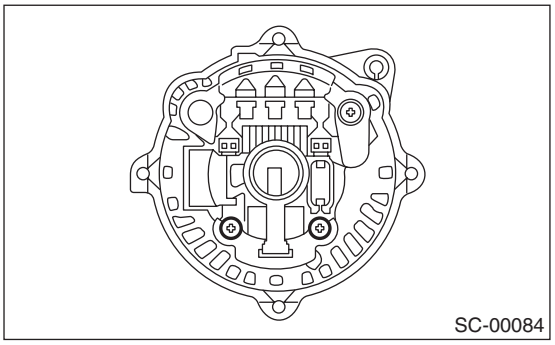

(2) Disconnect the connection between the IC regulator and rectifier, then remove the IC regulator.

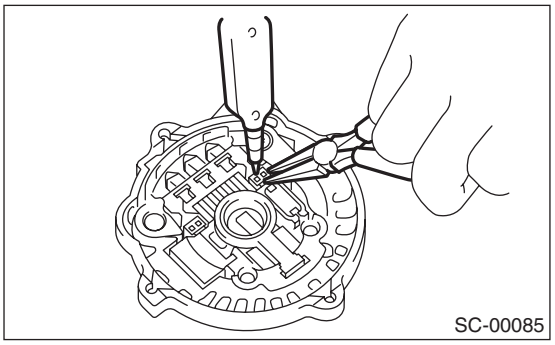

9) Use the following procedures to remove the brush.

(1) Remove the cover A.

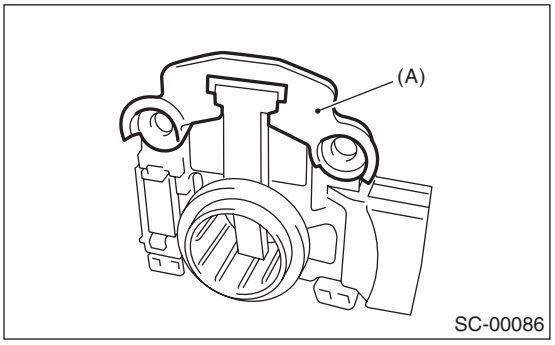

(A) Cover A

(2) Remove the cover B.

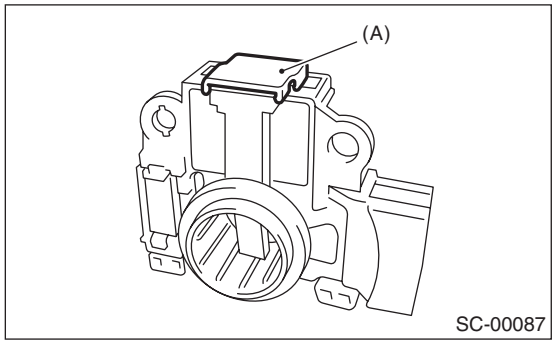

(A) Cover B

(3) Disconnect the connection and remove the brush.

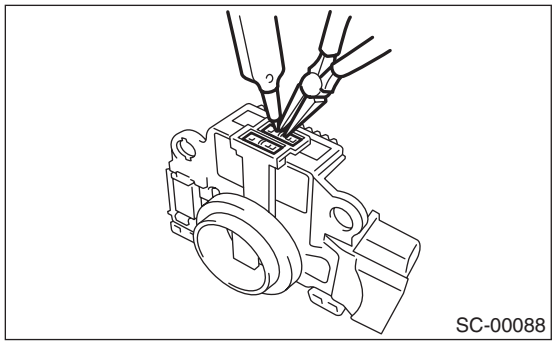

10) Remove the rectifier as follows.

(1) Remove the bolts which secure the rectifier.

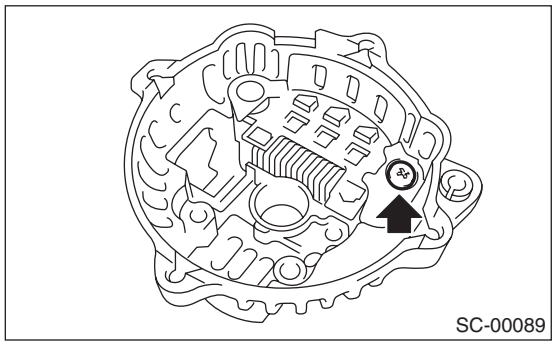

(2) Remove the cover on terminal B.

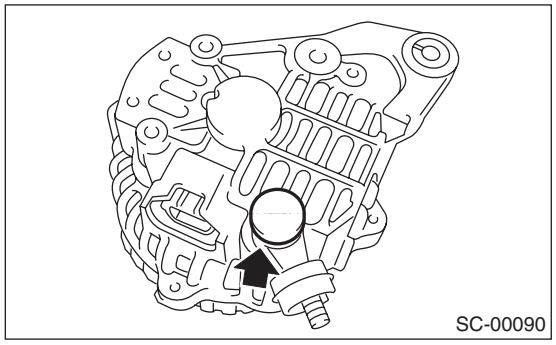

(3) Remove the nuts of terminal B, then remove the rectifier.

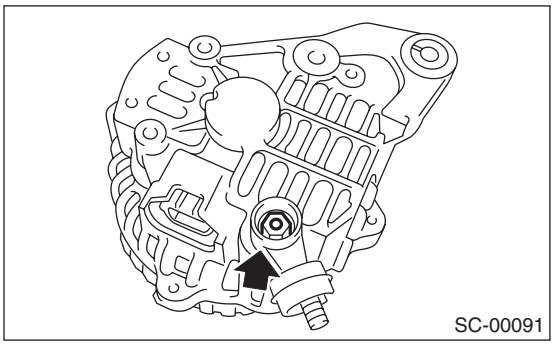

D: ASSEMBLY

Assemble in the reverse order of disassembly.

1) Pull-out of the brush

Before assembling, press the brush down into the brush holder, then fix the brush in that position by inserting a [1 mm (0.08 in) dia., 40 — 50 mm (1.6 — 2.0 in) long] wire through the hole as shown in the figure.

CAUTION:
After re-assembling, remove the wire.

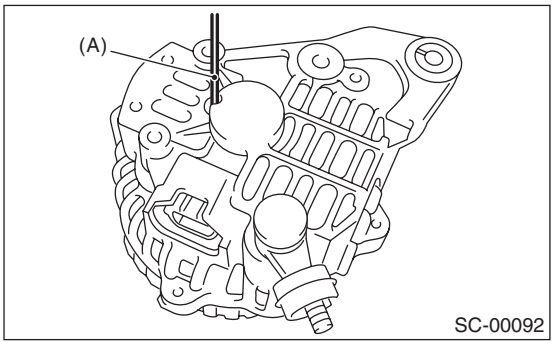

(A) Wire

2) Install the ball bearings.

(1) Set the ball bearings in the front cover, then securely install an appropriate tool (such as a socket wrench of proper size) to the bearing outer race.

(2) Using a press to press the ball bearings into the specified location.

(3) Install the bearing retainer.

3) Use a press to install the bearings (rear side) to the rotor shaft.

4) Heat the bearing box in rear cover [50 to 60°C (122 to 140°F)], and then press the rear bearing into rear cover.

CAUTION:
Do not apply grease to the rear bearings. If there is any oil on the bearing box, remove it completely.

5) After re-assembling, manually turn the pulley to check that the rotor rotates smoothly.

E: INSPECTION

1. DIODE

CAUTION:
There is the possibility of damaging the diodes if a mega-tester (used to measure high voltages) or a similar measuring instrument is used. Never use a mega tester or equivalent for this test.

1) Check the positive diode
Check for continuity between the diode lead and positive side heat sink. If resistance is 1 Ω or less only in the direction from the diode lead to the heat sink, the positive diode is OK.

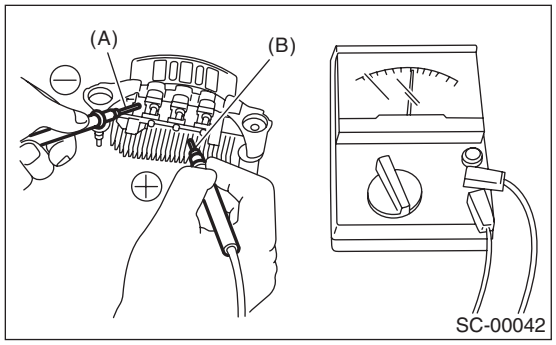

(A) Diode lead
(B) Heat sink (positive side)

2) Check negative diode
Check for continuity between the negative side heat sink and diode lead. If resistance is 1 Ω or less only in the direction from the heat sink to the diode lead, the negative diode is OK.

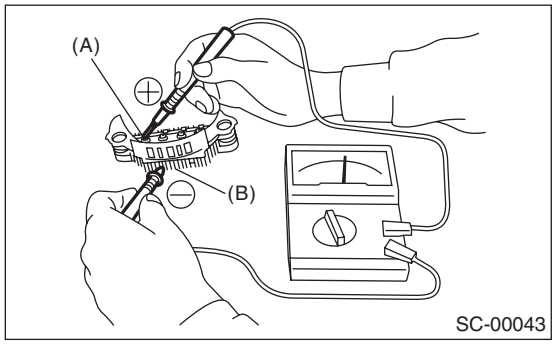

(A) Diode lead
(B) Heat sink (negative side)

2. ROTOR

1) Slip ring surface
Inspect the slip rings for contamination or any roughness on the sliding surface. Repair the slip ring surface using a lathe or sand paper.
2) Slip ring outer diameter
Measure the slip ring outer diameter. Replace the rotor assembly if the slip ring is worn.

Slip ring outer diameter:
Standard
22.7 mm (0.894 in)
Limit
22.1 mm (0.870 in)

3) Continuity test
Using a circuit tester, check the resistance between slip rings.
If the resistance is not within the standard, replace the rotor assembly.

Specified resistance:
Approximately 1.8 — 2.2 Ω

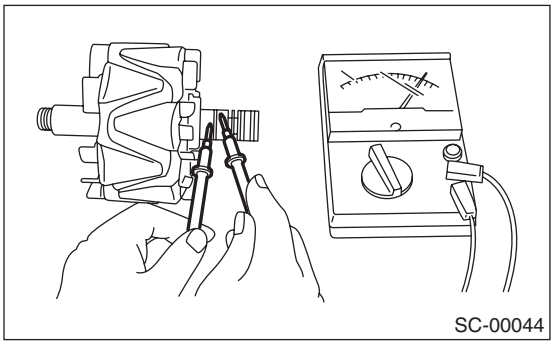

4) Insulation test
Check the continuity between slip ring and rotor core or shaft. If the resistance is 1 Ω or less, replace the rotor assembly because the rotor coil is grounded.

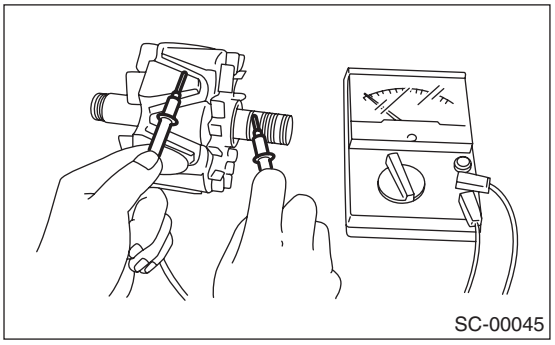

5) Ball bearings (rear side)
Check the rear ball bearing. If there is any noise, or the rotor does not rotate smoothly, replace the bearings.

3. STATOR

1) Continuity test
Inspect continuity between the stator coil lead wire terminals. If the resistance is 1 MΩ or more, the lead wire is damaged. Replace the stator assembly.

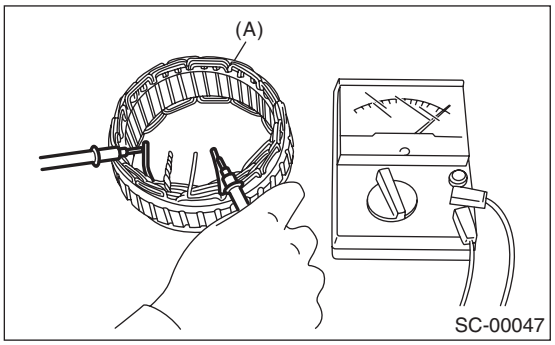

(A) Stator

2) Insulation test
Inspect the continuity between the stator coil stator core and lead wire terminals. If the resistance is 1 Ω or less, the stator coil is grounded. Replace the stator assembly.

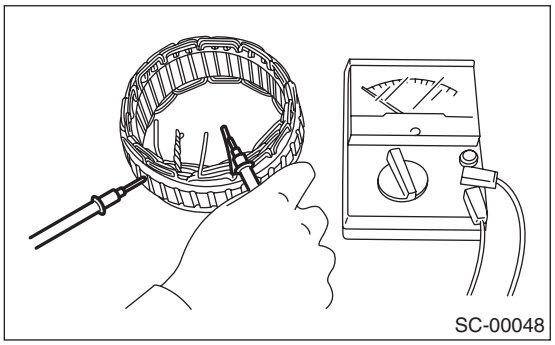

4. BRUSH

1) Measure the length of each brush. Replace the brush if wear exceeds service limits. There is a service limit mark (A) on each brush.

Brush length:
Standard
18.5 mm (0.728 in)
Service limit
5.0 mm (0.197 in)

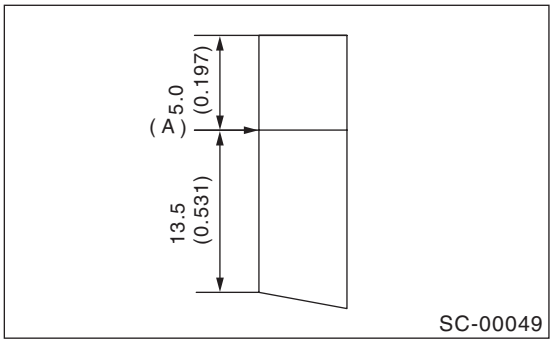

2) Check that there is appropriate pressure on the brush spring.
Using a spring pressure indicator, push the brush into the brush holder until its tip protrudes 2 mm (0.08 in). Then measure the pressure of brush spring. If the pressure is 2.648 N (270 g, 9.52 oz) or less, replace the brush spring with a new part. 4.609 — 5.786 N (470 — 590 g, 16.58 — 20.810 oz) pressure is required on the new spring.

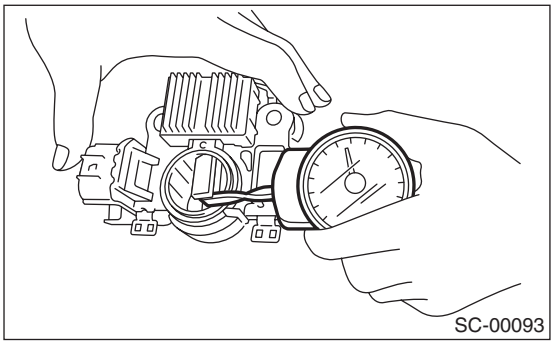

5. BEARING (FRONT SIDE)

Check the front ball bearing. Replace the ball bearings if there is resistance in the rotation, or if there is any abnormal noise.